[illegible]3[illegible] [illegible]

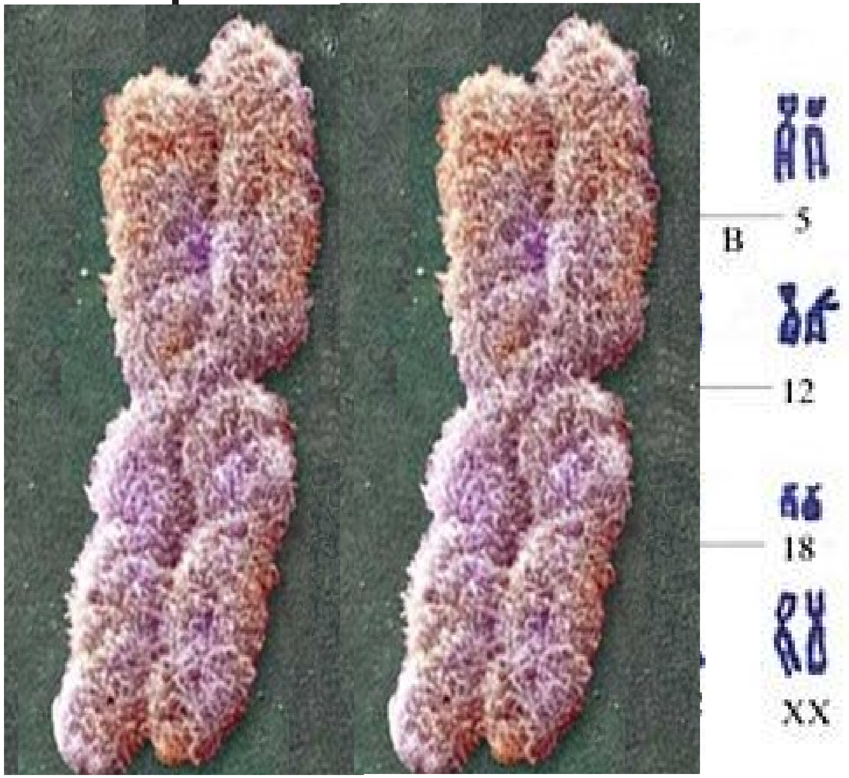

B
5
12
18
XX

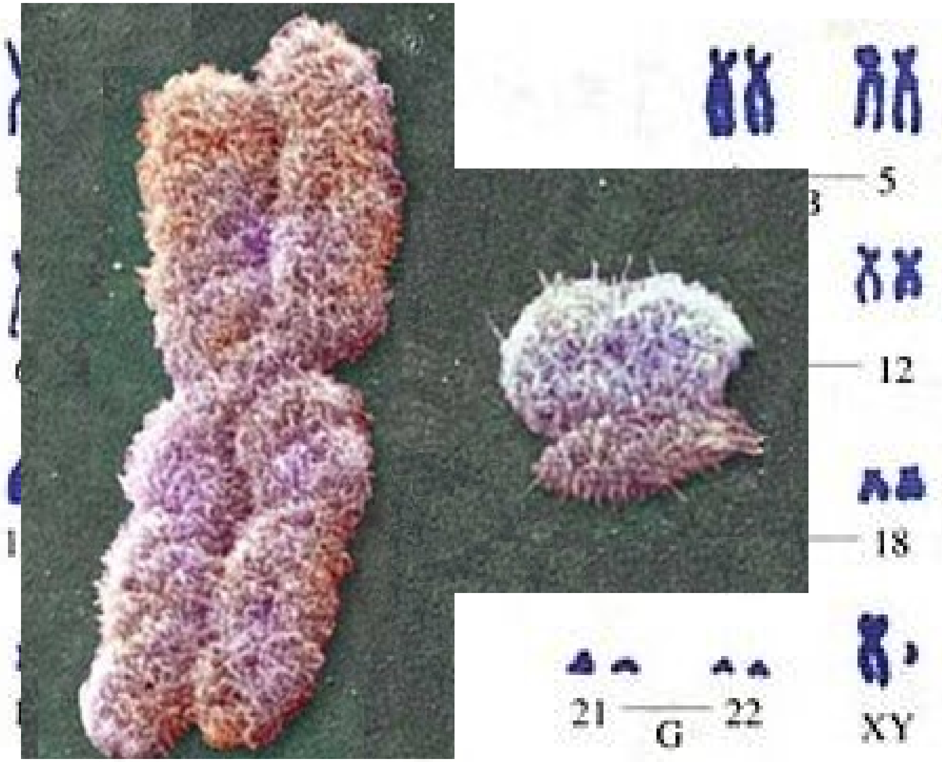

5
12
18
21
G
22
XY

[illegible]

[illegible]

[illegible]

[illegible]

- [illegible] X [illegible]
  - [illegible] X [illegible]
  - [illegible] X [illegible]
- [illegible] Y [illegible]

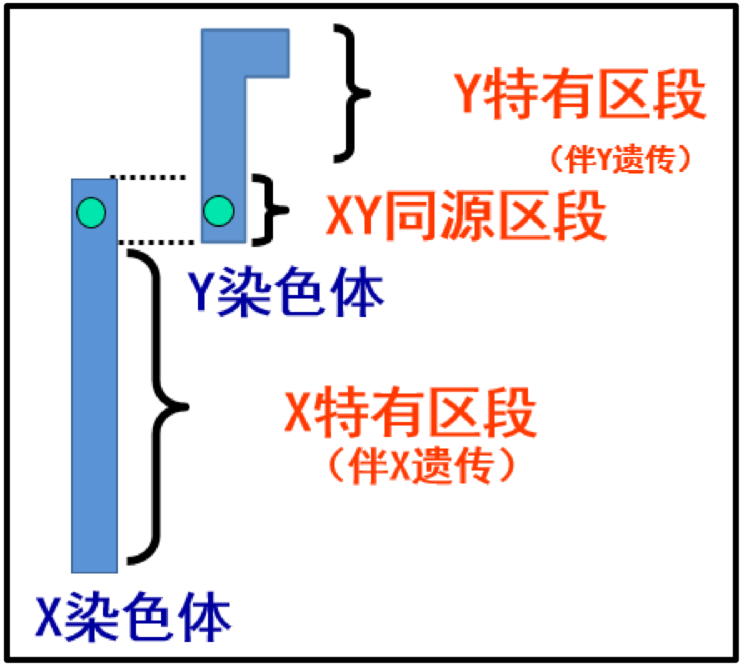

1. □Y□□□□□

1. □□□□□□□□□□□□
2. □□□□□□□□□□□□
□□□□□□□□□

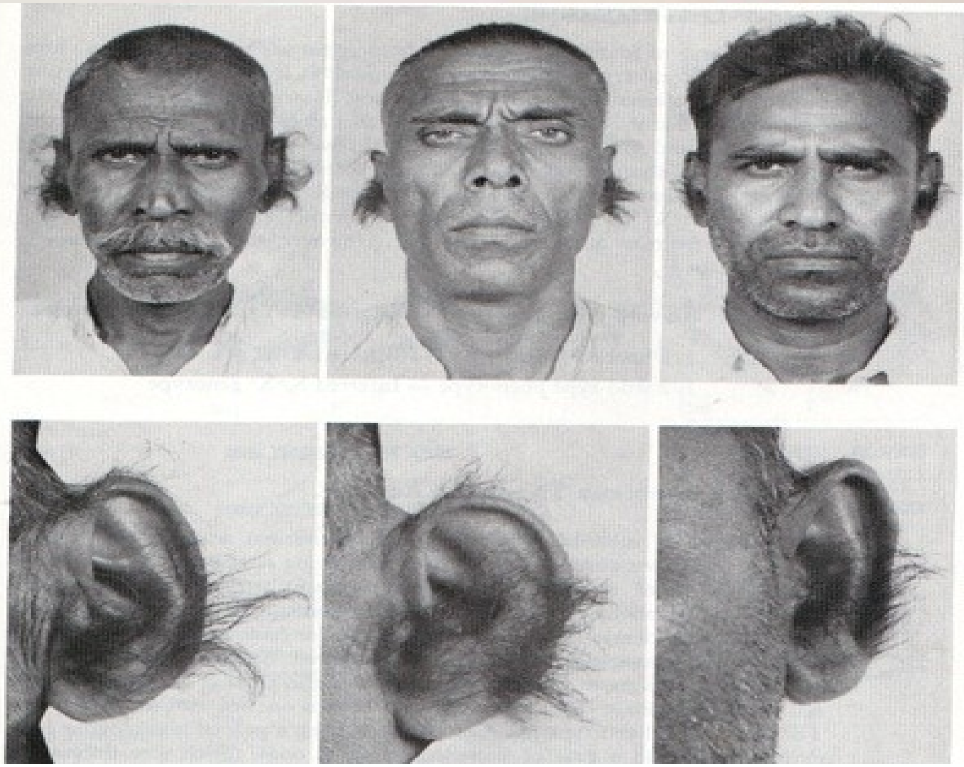

□□□□□□□

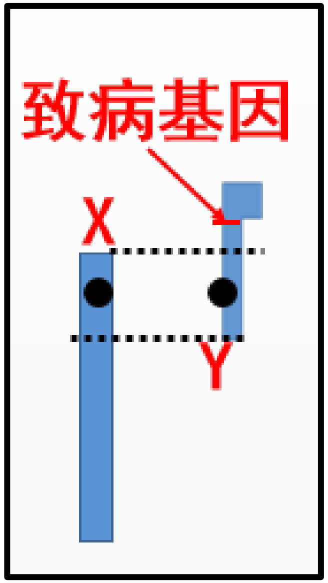

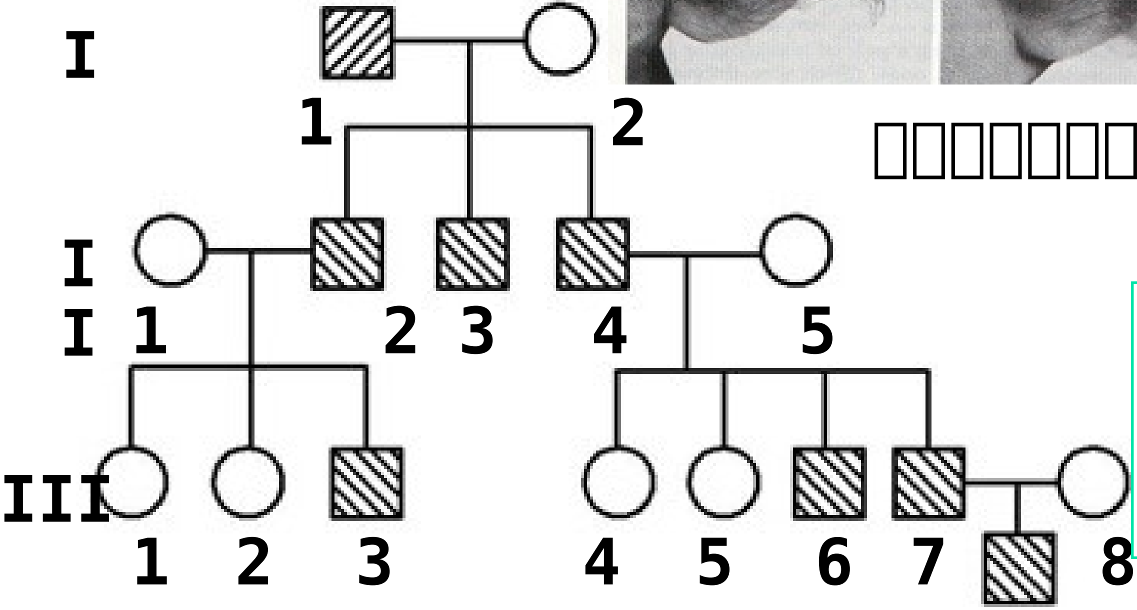

□ □□□□
○ □□□□
■● □□
□—○ □□□□

□□□□□□□

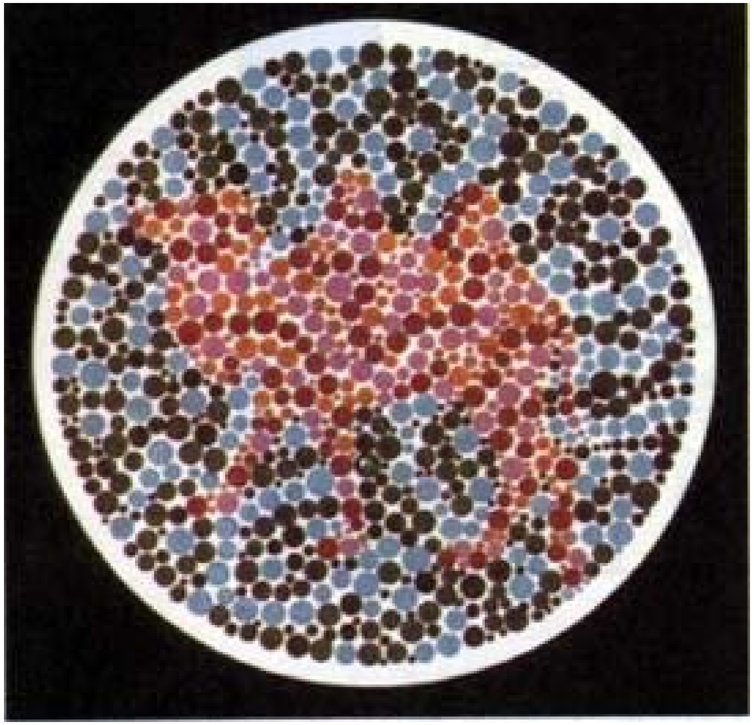

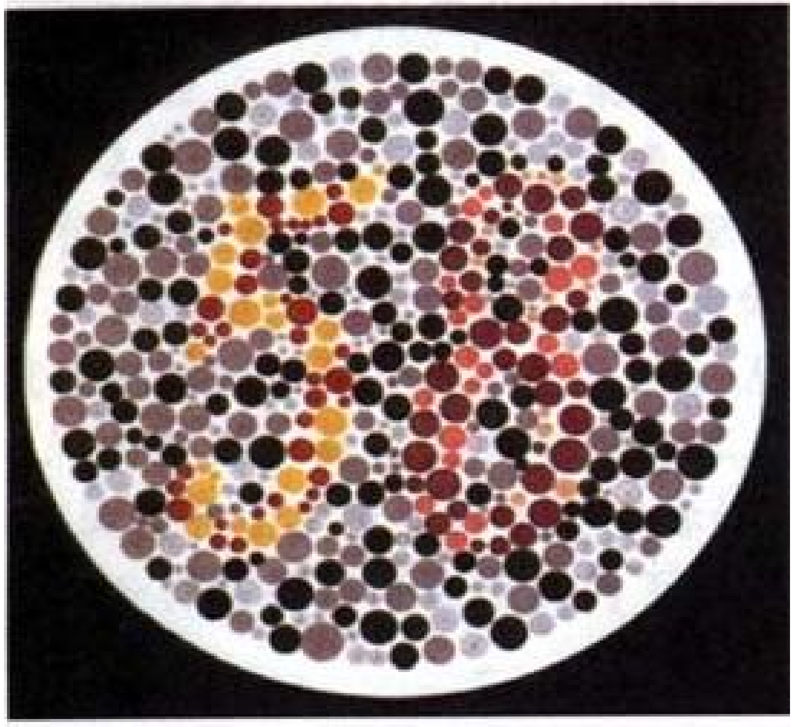

□□□ 7% □□□□ 0.5%

[illegible]

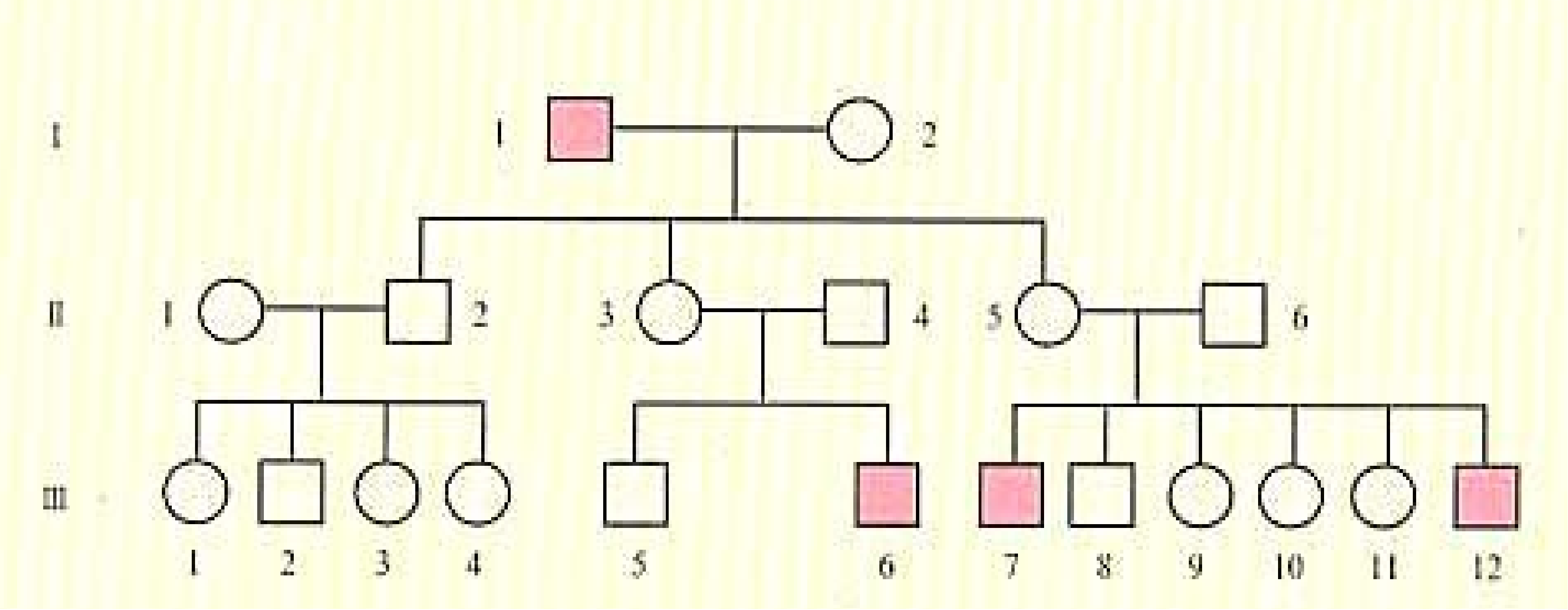

1. [illegible]
2. [illegible] X [illegible] Y [illegible]

2. [illegible] X [illegible]

	[illegible]			[illegible]	
[illegible]					
[illegible]					

[illegible]

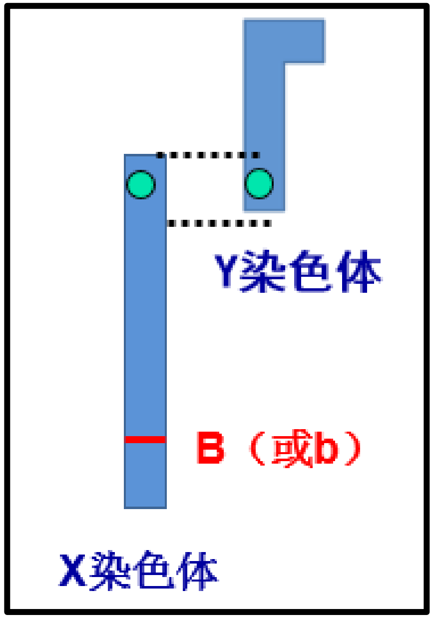

[illegible]：

[illegible]

①X^BX^B × X^bY:

②X^BX^b × X^BY:

③X^BX^b × X^bY:

④X^bX^b × X^BY:

[illegible] X [illegible]

[illegible] 7%
[illegible] 0.5%

① [illegible]
② [illegible]
③ [illegible]

[illegible]

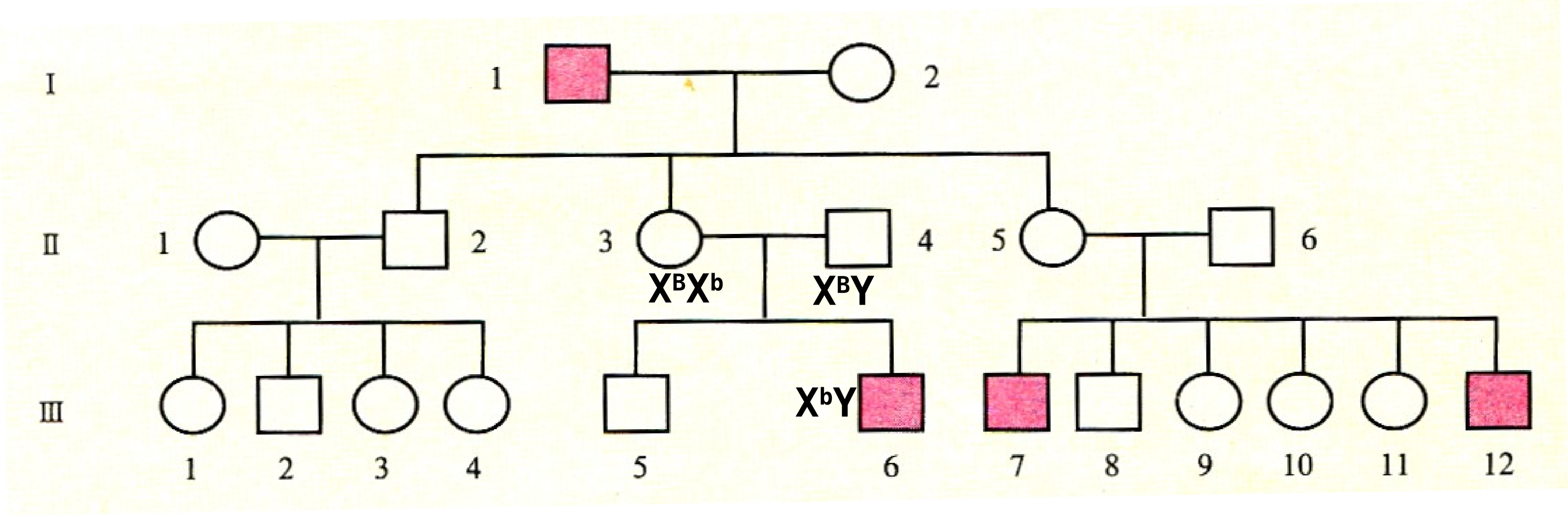

□□□□ D □□□

□□□□□□□□□□

□ V_D □□□□□□□□ X □□□□

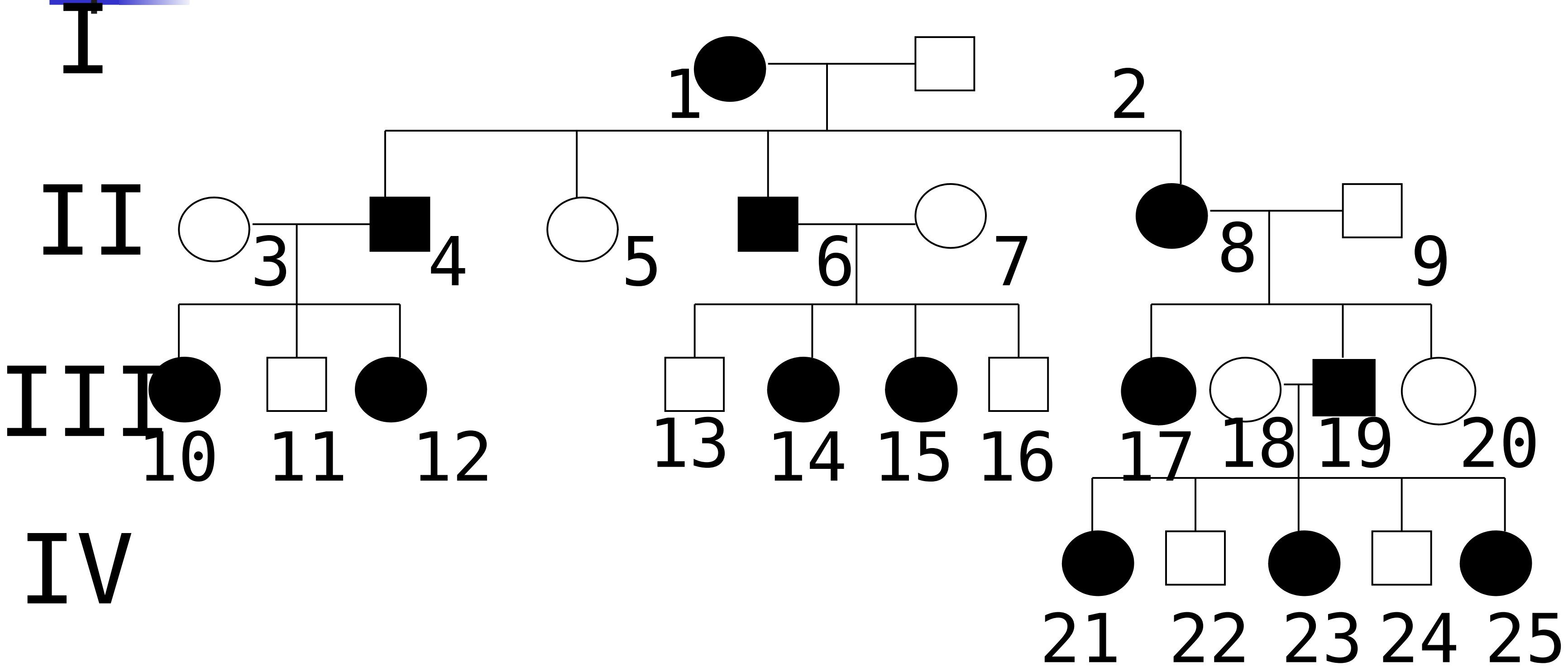

□□□□ D □□□□□□

1. □□□□□□□□□□□□□□□□
2. □□ X □□□□□□ Y □□□□□

3. □X□□□□

	□□			□□	
□□□					
□□□		□□□□□□□□			

□□□□□□D□□□□□□□□□□□

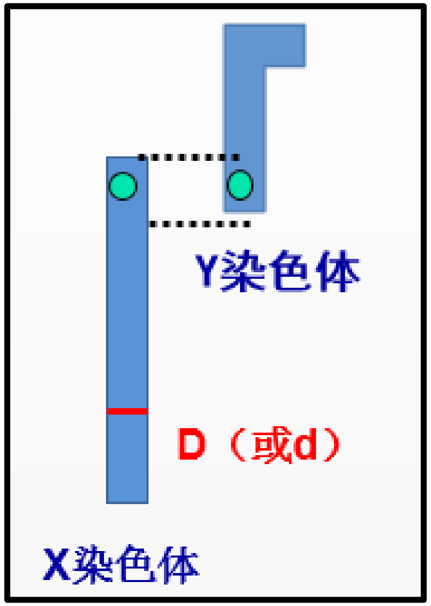

□□：X□□□0□□□□□□□□□□□□□□

□□□□□

[illegible] X [illegible]

① [illegible]

② [illegible]

③ [illegible]

[illegible] D [illegible]

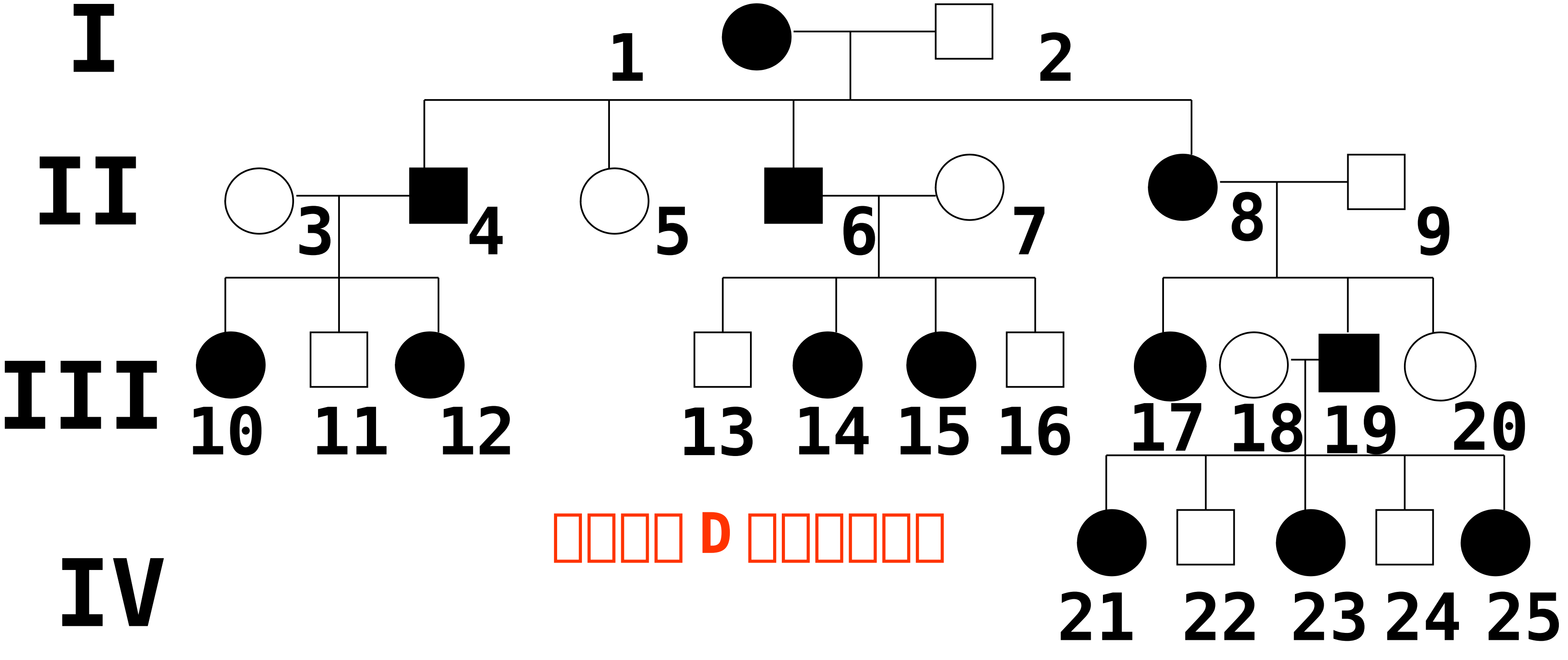

I
1
2
II
3
4
5
6
7
8
9
III
10
11
12
13
14
15
16
17
18
19
20
IV
21
22
23
24
25
[illegible] D [illegible]

4. [illegible]

[illegible]

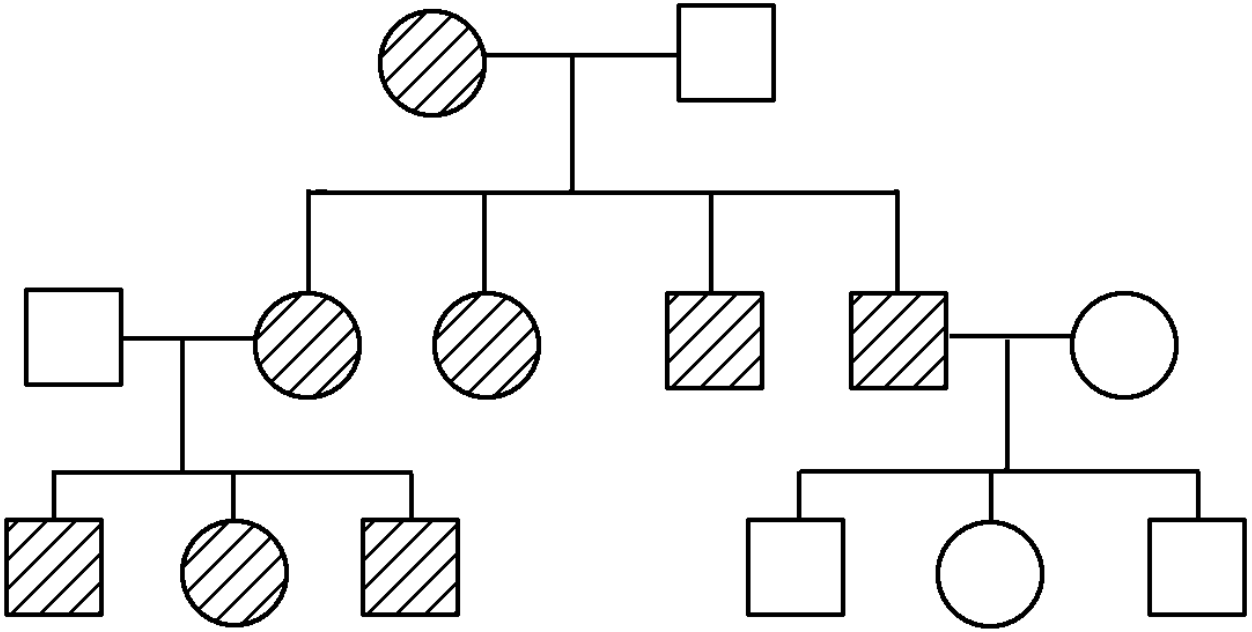

[illegible]

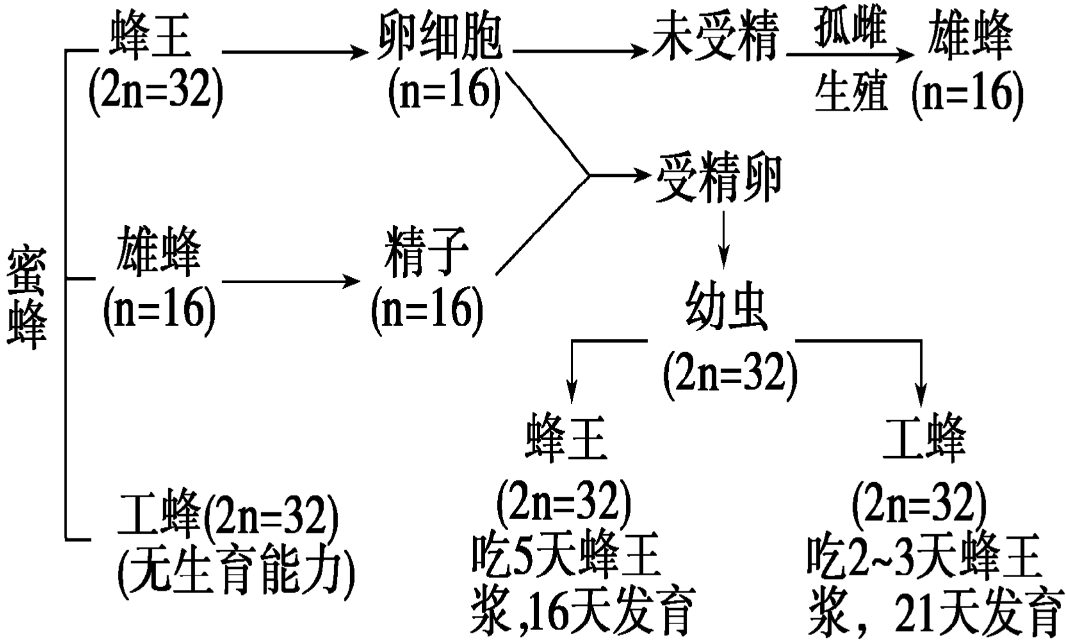

1. [illegible]

2. [illegible]

[illegible]

3.ZW [illegible] XY [illegible]

ZZ [illegible] ZW [illegible]

4. [illegible] X

5.XY [illegible] Y [illegible] X [illegible] X

6. [illegible] X [illegible] Y [illegible] X

7. [illegible] X

[illegible]

1. [illegible]

[illegible], [illegible] **X** [illegible]

----[illegible]

2. [illegible]

	[illegible] ZW		[illegible] ZZ		
[illegible]	Z^BW	Z^bW	Z^BZ^B	Z^BZ^b	Z^bZ^b
[illegible]	[illegible]	[illegible]	[illegible]	[illegible]	[illegible]

2. [illegible]

[illegible] ZW [illegible] (B [illegible]) [illegible] b [illegible]

P ♂ [illegible] ♀ [illegible]

Z^bZ^b × Z [illegible] W

[illegible] Z^b Z [illegible] W

[illegible] Z^BZ^b Z^bW

♂ [illegible] ♀ [illegible]

[illegible]

- [illegible] **3** [illegible] [illegible] **2**

[illegible]

[illegible]
[illegible]
X [illegible]

① $X^BX^B \times X^BY \rightarrow X^BY + X^BX^B$

② $X^BX^B \times X^bY \rightarrow X^BY + X^BX^b$

③ $X^BX^b \times X^BY$

$\rightarrow X^BY + X^bY + X^BX^B + X^BX^b$

④ $X^BX^b \times X^bY$

$\rightarrow X^BY + X^bY + X^BX^b + X^bX^b$

⑤ $X^bX^b \times X^BY \rightarrow X^bY + X^BX^b$

⑥ $X^bX^b \times X^bY \rightarrow X^bY + X^bX^b$

[illegible]

[illegible]

- [illegible]______[illegible] **1/4**
- [illegible]___[illegible] **1/2** [illegible]____[illegible] **0**
- [illegible]____ **1/4** [illegible]______[illegible] **0**
- [illegible]

[illegible]______ **1/8** [illegible]____[illegible]______ **1/4** [illegible]

[illegible]____[illegible] **1/8** **1/4**

[illegible]___[illegible]____
_[illegible] **1/4** **1/2**

□□□□□□□□□□□□

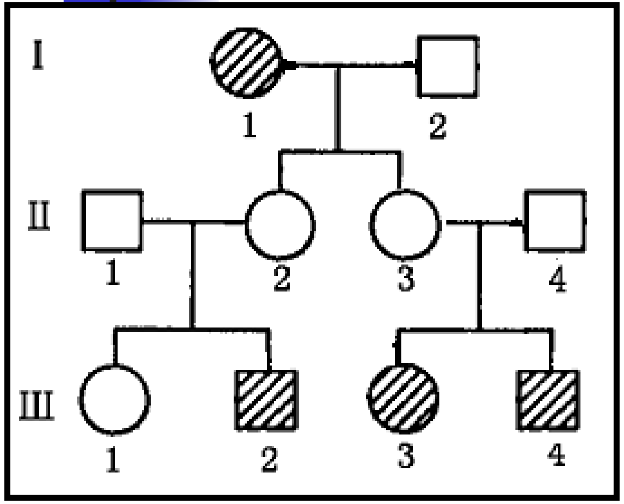
I
1
2
II
1
2
3
4
III
1
2
3
4

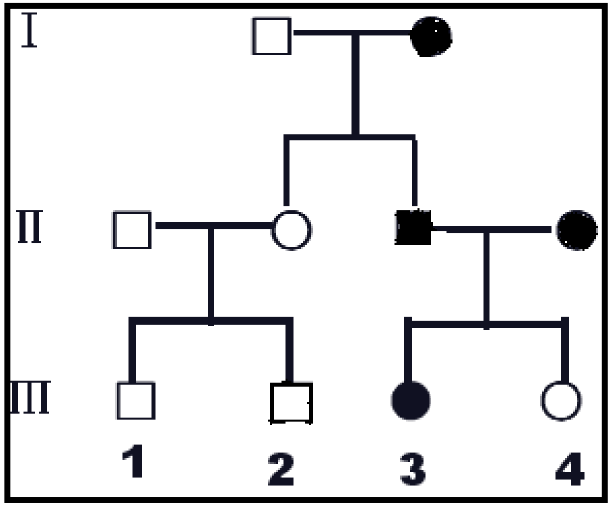
I
II
III
1
2
3
4

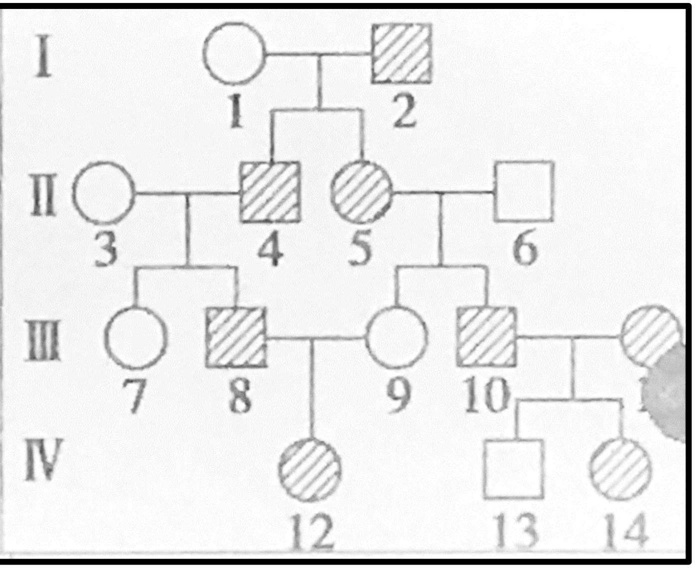
I
1
2
II
3
4
5
6
III
7
8
9
10
IV
12
13
14

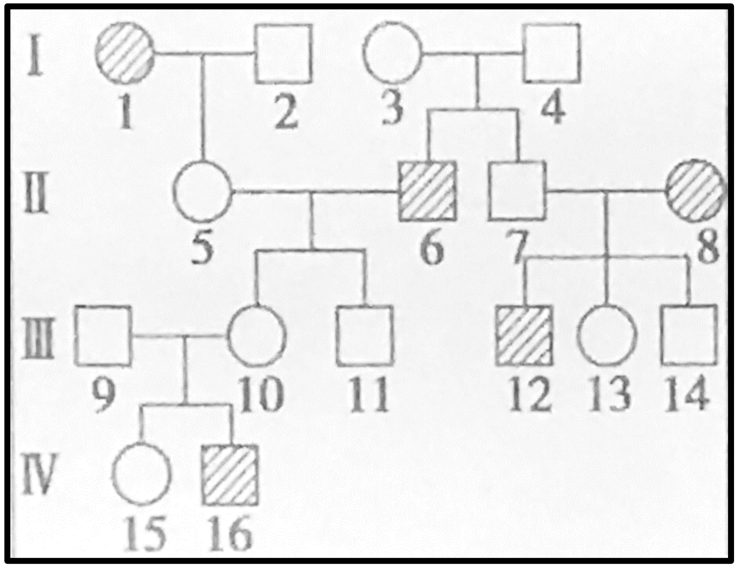
I
1
2
3
4
II
5
6
7
8
III
9
10
11
12
13
14
IV
15
16

□□□□□
□Y
□□
□□
□X□
□X□

[illegible]

[illegible] Y [illegible]

[illegible], [illegible] / [illegible]

[illegible]

[illegible]

[illegible] X [illegible]

(1) [illegible] [illegible]

① [illegible], [illegible]

② [illegible] X [illegible]

(2) [illegible] [illegible]

① [illegible], [illegible]

② [illegible] X [illegible]

□□□

□□□Ⅱ -1 □□□□□□□□

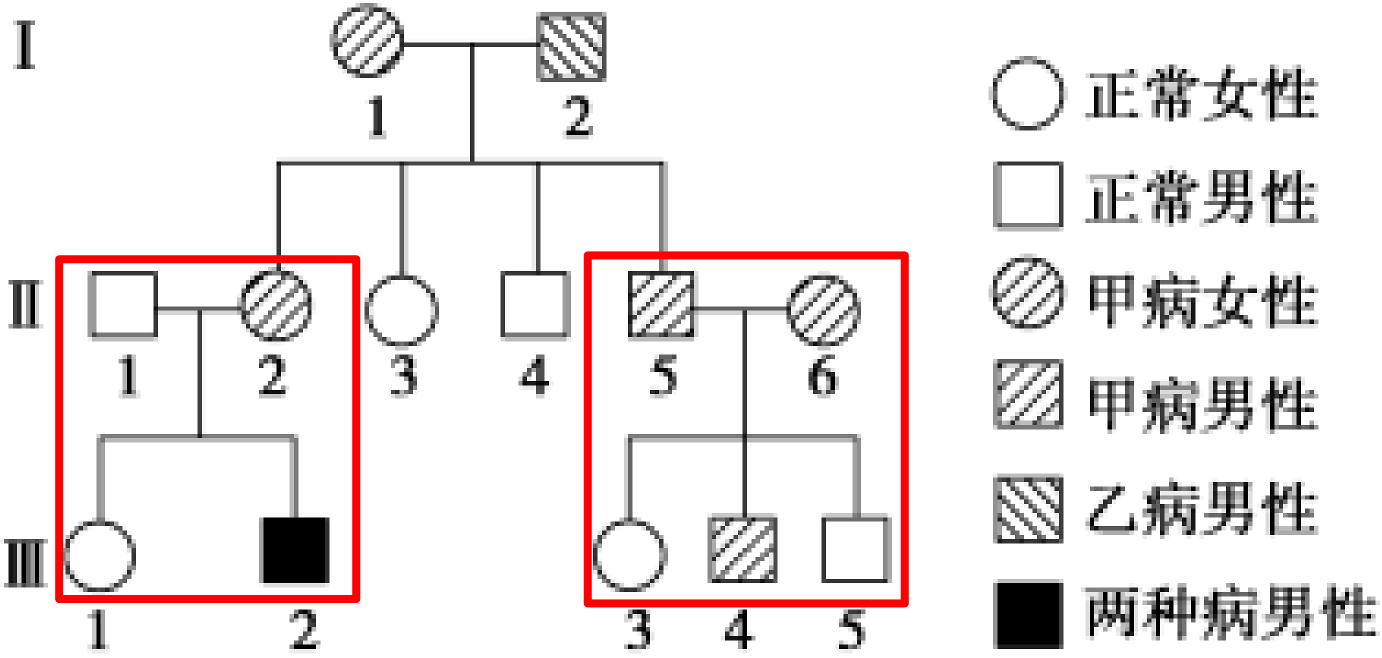

□□□□ □□□□□□□□□□

□X□□□□□□□□

□□□□

[illegible] 2 [illegible]

A [illegible] X [illegible]

B [illegible] X [illegible]

C [illegible]

D [illegible] 1 [illegible] 2 [illegible]

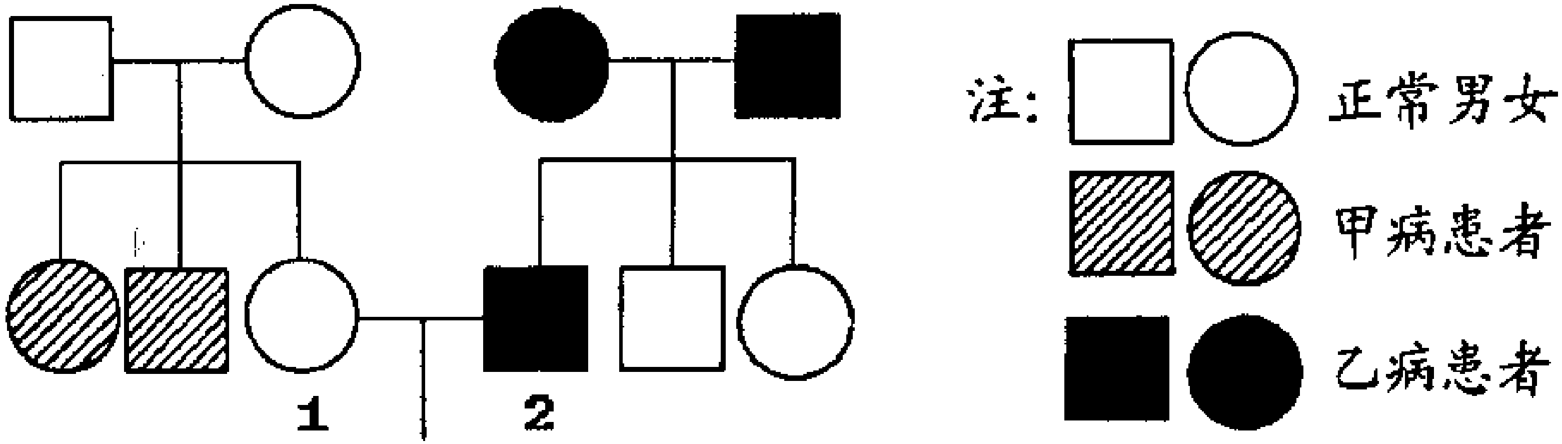

□□□

2. □□□□□□□□□□□□□□□□□□□□□□□□□□□□□ **I**$_4$ □□□□□□□□□□

□□ **A** □ **a** □ **B** □ **b** □□□□□□□□□□□□□□□□□□□□□□

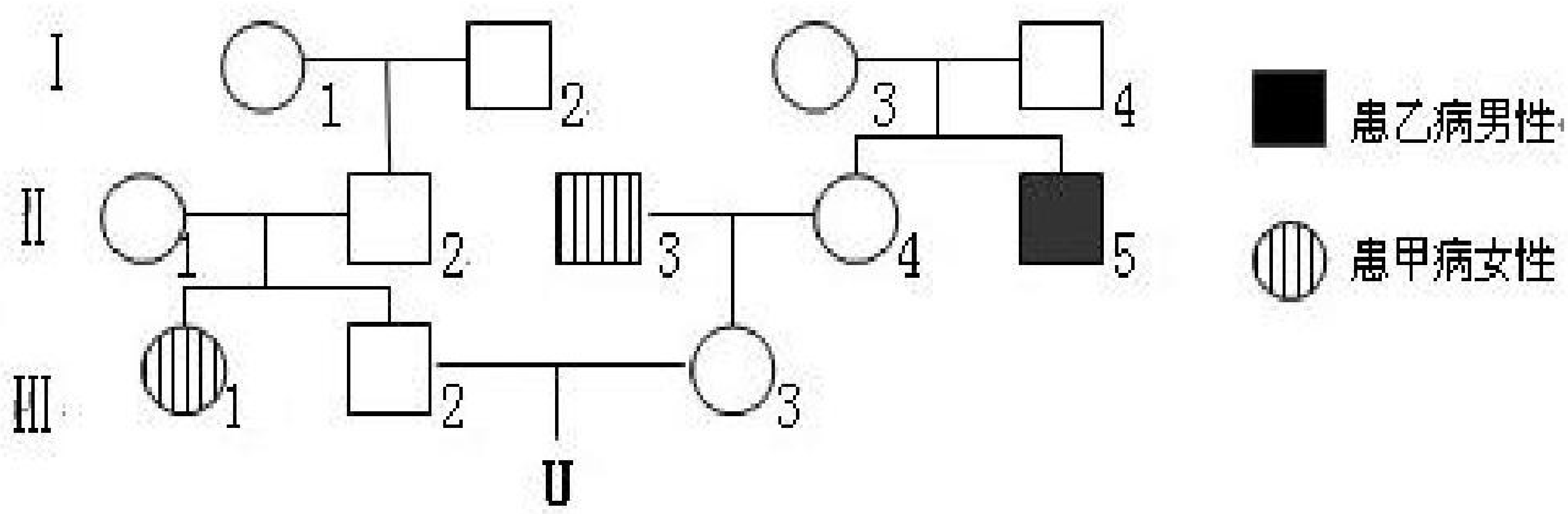

□**III** $_2$ □**III** $_3$ □□□ **U** □□□□□□□□ _____________**7/32** □

[illegible]

[illegible] × [illegible]

[illegible] . [illegible] B [illegible] (b) [illegible] X [illegible]

[[illegible]] [illegible] × [illegible]

① [illegible] X [illegible]

② [illegible]

[illegible] XY [illegible]

[illegible]

1. [illegible] X [illegible]

1. [illegible]

F_1	[illegible]	[illegible]	[illegible]	[illegible]
[illegible]	3/4	0	1/4	0
[illegible]	3/8	3/8	1/8	1/8

2. [illegible]

3. [illegible] x [illegible]

[illegible]

2. [illegible] XY [illegible] X [illegible]

[illegible] ____[illegible]____ [illegible] ____[illegible]____ [illegible]

[illegible] ____[illegible]____ [illegible] X [illegible] Y [illegible]

[illegible] ______________ [illegible] X [illegible]

[illegible]

3. [illegible] XY [illegible]

[illegible] ____[illegible]____ [illegible] ____[illegible]____ [illegible]

[illegible]__[illegible] **1:1** [illegible]____ ([illegible]) [illegible]__[illegible]__[illegible]

[illegible] **1:1**

[illegible]____[illegible]____[illegible]____[illegible]____[illegible]

4.[2020·全国卷Ⅰ]已知果蝇的长翅和截翅由一对等位基因控制。多只长翅果蝇进行单对交配（每个瓶中有1只雌果蝇和1只雄果蝇），子代果蝇中长翅∶截翅＝3∶1。据此无法判断的是（　　）

C

A. 长翅是显性性状还是隐性性状

B. 亲代雌蝇是杂合子还是纯合子

C. 该等位基因位于常染色体还是X染色体上

D. 该等位基因在雌蝇体细胞中是否成对存在

32.(8分)

已[illegible]蝇的性别决定方式为 XY 型,偶然出现的 XXY 个体为雌性可育。黑腹果蝇长翅(A)对残翅(a)[illegible](B)对白眼(b)为显性。现有两组杂交实验,结果如下:

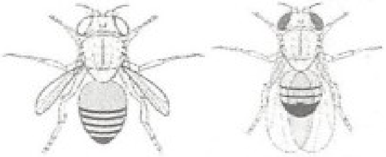

残翅白眼♀　　长翅红眼♂
甲　　　　　　乙

	实验①			实验②		
P	$aaX^BX^B \times AAX^bY$		P	$aaX^BY \times AAX^bX^b$		
F_1	长翅红眼♀	长翅红眼♂	F_1	长翅红眼♀	长翅白眼♂	长翅白眼♀
个体数	920	927	个体数	930	926	1

请回答下列问题:

(1)设计实验①与实验②的主要目的是验证____________________________。

(2)理论上预期实验①的 F_2 基因型共有________种,其中雌性个体中表现上图甲性状的概率为________,雄性个体中表现上图乙性状的概率为________。

(3)实验②F_1 中出现了1只例外的白眼雌蝇,请分析:

Ⅰ.若该蝇是基因突变导致的,则该蝇的基因型为________。

Ⅱ.若该蝇是亲本减数分裂过程中 X 染色体未分离导致的,则该蝇产生的配子为________________。

Ⅲ.检验该蝇产生的原因可用表现型为________的果蝇与其杂交。

32. 答案　(1)眼色性状与性别有关,翅型性状与性别无关

(2)12　0　3/8　(3)X^bX^b　X^bX^b,Y,X^b,X^bY　红眼雄性

解析　(1)由题意和实验①与实验②杂交方式所得F_1的性

1. [illegible] B [illegible] A [illegible]

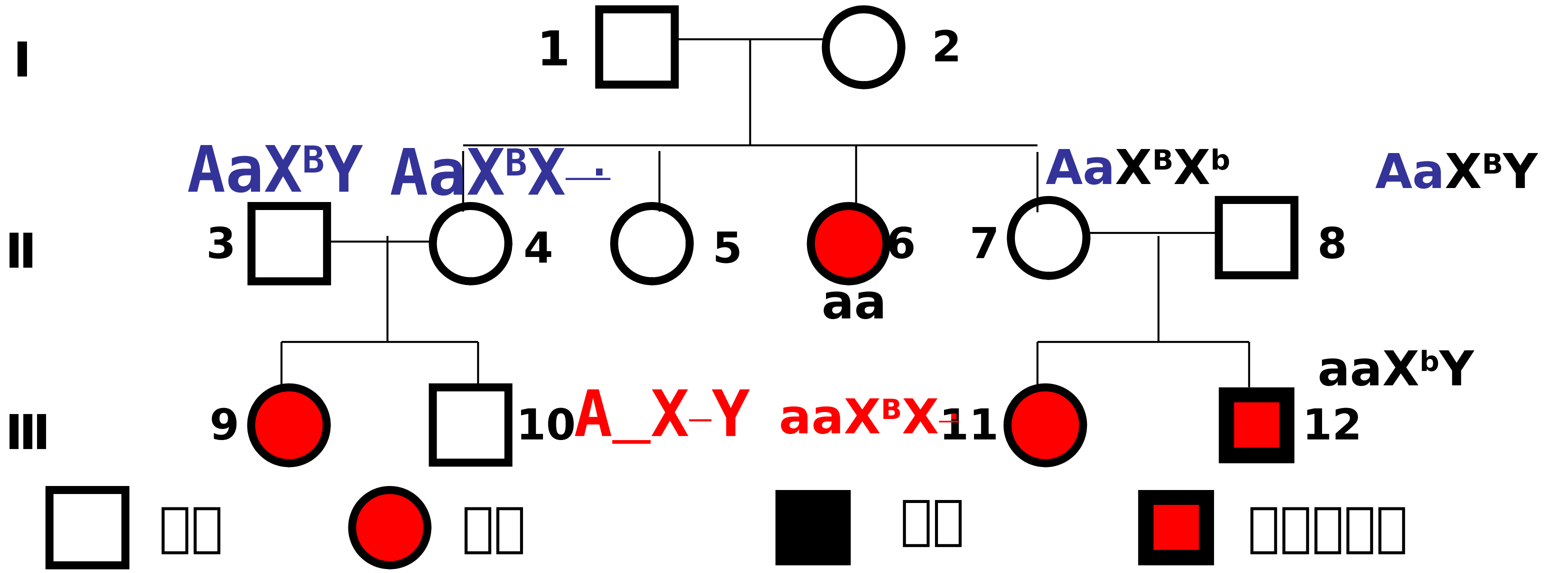

（1）Ⅰ1 [illegible] ________ AaXᴮY，Ⅰ2 [illegible] ________ AaXᴮXᵇ。

（2）Ⅱ5 [illegible] ________ 1/6。

（3）[illegible] Ⅲ10 X Ⅲ11 [illegible] ________ 1/8; [illegible] ________ [illegible] 1/6 ________ ; [illegible] 1/3 ________ 。

1/24